Vibration Test System TV 59355/AIT-440

S 59355/AIT-440 (Example drawing) Dimensions in mm

TECHNICAL PARAMETERS Vibration exciter S 59355/AIT-440

Rated peak force $Sine_{pk}$/$Random_{RMS}$/$Shock_{pk}$[1]	55000/51000/165000 N
Frequency range	5 - 2500 Hz
Main resonance frequency	2000 Hz
Max. displacement Peak-Peak[2]	50.8 mm
Max. velocity Sine/Random/Shock	2.0/2.0/2.5 m/s
Max. acceleration Sine/Random/Shock[1]	100/100/224 g
Suspension stiffness	200 N/mm
Effective moving mass	45.5 kg
Max. weight tested	910 kg
Weight with trunnion	4550 kg
Magn. stray field std./low degaussing	<1.5/<0.8 mT
Armature diameter	440 mm
Min. required compressed air supply	600 kPa
Interlocks	Temperature, displacement, cooling air, overcurrent, compressed air

1) theoretical maximum shock value. Depends on payload, amplifier, shock and shock width
2) optionally displacement of 76.2 mm (3 inch); impact by moving to static mass and frequency is possible

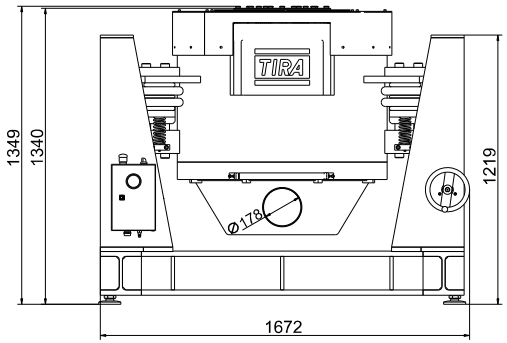

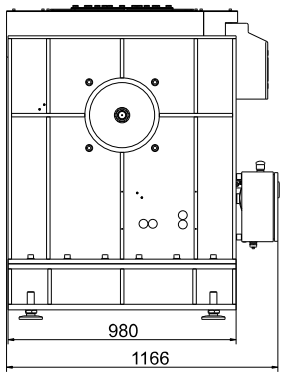

SCOPE OF DELIVERY, OPTIONS AND FEATURES OF THE SYSTEM

Scope of delivery:
- Vibration exciter 55 kN
- Trunnion mount
  - with integrated vibration isolation (AIT)
- Power amplifier 113 kVA
- Cooling blower
- Frequency converter
- Connection cables (each 10 m)
- Power cables (10 m)
  - for amplifier (direct connection) and
  - cooling blower (CEE 63 connector)
- Blower hose ø175 mm (5 m)
- Compressed-air hose NW 7,2 (Standard) (5 m)

Options:
- 3 inch (76.2 mm) displacement
- Different hole pattern of armature (different pitch diameter
  - and/or thread inserts) at customers request
- Dual Bearing armature
- Low degaussing kit to further reduce stray magnetic field
- Airglide-option (Shaker movable on air cushions)
- Wheels&Rails (incl. 3m rails)
- Thermobarrier (-40°C to +140°C)
- Chamber leadthrough
- Climatic chamber support kit
- Remote control (Software)
- Silencer
  - for cooling blower (Noise reduction 9 - 15 dB(A))
- Acoustic enclosure
  - for cooling blower (Noise reduction 5 - 23 dB(A))
- Water-cooled acoustic enclosure
  - for cooling blower (Noise reduction 30 dB(A))
- Cable extension
- Factory acceptance test

Features:
- AIT-trunnion mount
  - with integrated vibration isolation < 3 Hz
- Coarse filter unit
- Fully automatic pneumatic load compensation
- AIT fixable
- Automatic centering of the AIT-System and
  - the armature
- Degauss kit to reduce stray magnetic field
- Integrated mains switch and line filter
- Integrated field power supply
- Energy-saving mode
- Noise-button
- Input voltage analyzer
- Voltage clipping limiter to avoid clipping
- 3 Sigma peak current
- Made in Germany
- Servicehotline

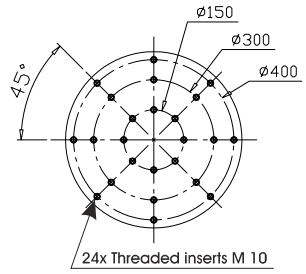

Armature 440 (Standard)

TIRA GmbH Eisfelder Str. 23/25, 96528 Schalkau, Germany • Tel.: +49 36766 280-0 • Fax: +49 36766 280-99 • Internet: www.tira-gmbh.de • Email: st@tira-gmbh.de

Subject to modifications

Vibration Test System TV 59355/AIT-440

TECHNICAL PARAMETERS Amplifier A 4 11 3 113

Output power$_{RMS}$	113000 VA
Frequency range	DC - 4 kHz
Voltage$_{RMS}$, max.	150 V
Current$_{RMS}$, max.	750 A
Load resistance, opt.	1 Ohm
Signal input voltage$_{RMS}$ (switchable)	2.5/5/10 V
Distortion	< 0.7 %
Signal to noise ratio	> 90 dB
Field voltage, max.	112 V
Field current, max.	100 A
Weight	910 kg
Dimensions (WxHxD)	1200 x 2200 x 800 mm
Power supply (Standard)	3~ / N / PE 400 V±5% 50 Hz Direct connection (Terminal block)
Recommended fuse protection (Standard)	120 A slow
Max. power consumption at 400 V	62 kVA
Interlocks:	Overload, temperature, clipping and more

Features:

High Signal to noise ratio of >90 dB	Lo-Field/Hi-Field button (Energy-saving mode)
Field supply integrated	Noise-button
Mains switch and integrated line filter	Input voltage analyzer
ESD-monitoring (Protection of the system against damage)	Voltage clipping limiter to avoid clipping
Field voltage/Field current variable according to customer spec.	3 Sigma peak current

TECHNICAL PARAMETERS Cooling blower TB 7/FU/20

Volume flow rate*	3000-3300 m³/h
Total pressure difference*	9.5 - 10.2 kPa
Power	20 kW
Frequency	105 Hz
Hose diameter	175 mm
Hose length (Std.)	5 m
Weight	157 kg
Dimensions (WxHxD)	625 x 700 x 575 mm
Sound pressure level, max.	105 dB(A)
Frequency converter (moveable):	
Weight	150 kg
Dimensions (WxHxD)	600 x 1400 x 400 mm
Power supply (variable)	3~ / PE 400 V±5% 50 Hz CEE 63
Recommended fuse protection (Standard)	50 A slow
Max. power consumption at 400 V	27 kVA

Options:

Silencer TB 7/FU-SI (Noise reduction 9 - 15 dB(A))
Dimensions (LxD): 1120 x 280 mm
Weight: 9.2 kg
Acoustic enclosure TB 7/FU-AE (Noise reduction 5 - 23 dB(A))
Dimensions (WxHxD): 1130 x 1630 x 1630 mm
Weight: 103 kg
Water-cooled acoustic enclosure WWT (Noise reduction 30 dB(A))
Dimensions (WxHxD): 1500 x 2080 x 1200 mm
Weight: 800 kg
Hose length according to customers request (up to 10 m)

*During operation at vibration exciter

Frequency converter (enclosure)

Cooling blower TB 7/FU/20

Silencer TB 7/FU-SI (optional)

Acoustic enclosure TB 7/FU-AE (optional)

TIRA GmbH Eisfelder Str. 23/25, 96528 Schalkau, Germany • Tel.: +49 36766 280-0 • Fax: +49 36766 280-99 • Internet: www.tira-gmbh.de • Email: st@tira-gmbh.de

Subject to modifications