TIRA Schwingtechnik
Vibration Test Systems

Vibration Test System TV 51010/LSS-300

S 51010/LSS-300 (Example drawing) Dimensions in mm

TECHNICAL PARAMETERS Vibration exciter S 51010/LSS-300

Rated peak force $Sine_{pk}$/$Random_{RMS}$/$Shock_{pk}$[1]	11000/9000/27500 N
Frequency range	5-2000 Hz
Main resonance frequency	>2000 Hz
Max. displacement Peak-Peak[2]	100 mm
Max. velocity Sine/Random/Shock	2.0/2.0/4.5 m/s
Max. acceleration Sine/Random/Shock[1]	80/80/160 g
Suspension stiffness	electronically adjustable
Effective moving mass	17.0 kg
Max. weight tested	80 kg
Weight	1200 kg
Magn. stray field Std./low degaussing	<1.5/<0.8 mT
Armature diameter	300 mm
Interlocks	Temperature, displacement, cooling air, overcurrent

1) theoretical maximum shock value. Depends on payload, amplifier, shock and shock width
2) only with foundation mounting

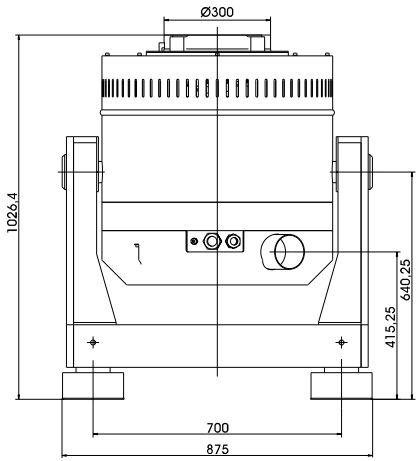

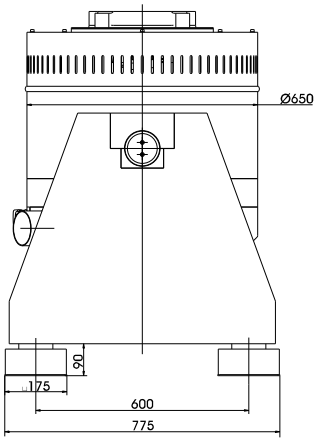

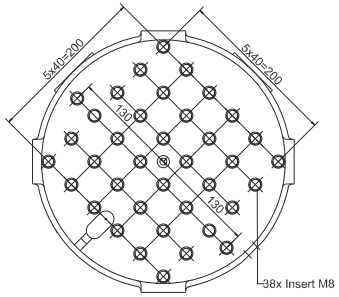

Lochbild (Standard)

SCOPE OF DELIVERY, OPTIONS AND FEATURES OF THE SYSTEM

Scope of delivery:
- Vibration exciter 11 kN
- Swivel frame
- Power amplifier 45 kVA
- Cooling blower
- Connection cables (each 5 m)
- Power cables (5 m) for amplifier (CEE 63 connector)
- Blower hose ø100 mm (5 m)

Options:
- Different hole pattern of armature (different pitch diameter and/or thread inserts) at customers request
- Low degaussing kit to further reduce stray magnetic field
- Wheels&Rails (incl. 3m rails)
- Squeak&Rattle (Silent operation without blower)
- Thermobarrier
- Chamber leadthrough
- Climatic chamber support kit
- Remote control (Software)
- Silencer for cooling blower (Noise reduction 3 - 6 dB(A))
- Acoustic enclosure for cooling blower (Noise reduction 5 - 23 dB(A))
- Cable extension
- Factory acceptance test

Features:
- Vibration isolation < 6 Hz
- Coarse filter unit
- Fully automatic electronic load compensation
- Electronic zero point regulation with adjustable stiffness
- Automatic centering of the armature
- Degauss kit to reduce stray magnetic field
- Integrated mains switch and line filter
- Integrated field power supply
- Noise-button
- Input voltage analyzer
- Voltage clipping limiter to avoid clipping
- 3 Sigma Peak current
- Made in Germany
- Servicehotline

TIRA GmbH Eisfelder Str. 23/25, 96528 Schalkau, Germany • Tel.: +49 36766 280-0 • Fax: +49 36766 280-99 • Internet: www.tira-gmbh.de • Email: st@tira-gmbh.de

© TIRA GmbH • Version 02 - 2014-05-05

Subject to modifications

Vibration Test System TV 51010/LSS-300

TECHNICAL PARAMETERS Amplifier A 3 01 3 045 T

Output power$_{RMS}$	45000 VA
Frequency range	DC - 4 kHz
Voltage$_{RMS}$, max.	150 V
Current$_{RMS}$, max.	300 A
Load resistance, opt.	1 Ohm
Signal input voltage$_{RMS}$ (switchable)	2.5/5/10 V
Distortion	< 0.7 %
Signal to noise ratio	> 90 dB
Field voltage, max.	140 V
Field current, max.	8 A
Weight	515 kg
Dimensions (WxHxD)	600 x 2200 x 800 mm
Power supply (Standard)	3~ / N / PE 400 V±5% 50 Hz, CEE 63
Recommended fuse protection (Standard)	63 A slow
Max. power consumption at 400 V (incl. blower)	28.2 kVA
Interlocks:	Overload, temperature, clipping and more

Features:

High Signal to noise ratio of >90 dB	Noise-button
Field supply integrated	Input voltage analyzer
Mains switch and integrated line filter	Voltage clipping limiter to avoid clipping
ESD-monitoring (Protection of the system against damage)	3 Sigma peak current
Field voltage/Field current variable according to customer spec.	Electronic zero-point-regulation (TMC)

TECHNICAL PARAMETERS Cooling blower TB 120

Volume flow rate	max. 1140 m³/h
Total pressure difference	max. 28 kPa
Power	11.5 kW
Frequency	50 Hz
Hose diameter	100 mm
Hose length (Std.)	5 m
Weight	131 kg
Dimensions (WxHxD)	600 x 636 x 701 mm
Sound pressure level, max.	max. 87 dB(A)
Power supply (standard)	by amplifier rack
Max. power consumption at 400 V	16 kVA

Options:

Silencer TB 120-SI (Noise reduction 3 - 6 dB(A))
Dimensions (LxD): 1100 x 160 mm
Weight: 1.2 kg
Acoustic enclosure TB 120-AE (Noise reduction 5 - 23 dB(A))
Dimensions (WxHxD): 1094 x 1086 x 1000 mm
Weight: 134 kg
Hose length according to customers request (up to 10 m)

Cooling blower TB 120

Silencer TB 120-SI (optional)

Acoustic enclosure TB 120-AE (optional)

TIRA GmbH Eisfelder Str. 23/25, 96528 Schalkau, Germany • Tel.: +49 36766 280-0 • Fax: +49 36766 280-99 • Internet: www.tira-gmbh.de • Email: st@tira-gmbh.de

© TIRA GmbH • Version 02 - 2014-05-05

Subject to modifications